REVISION HISTORY			
REV.	DESCRIPTION	DATE	DRAWN BY
1	ORIGINAL PRINT	12/2/2019	N. MASSOUDA

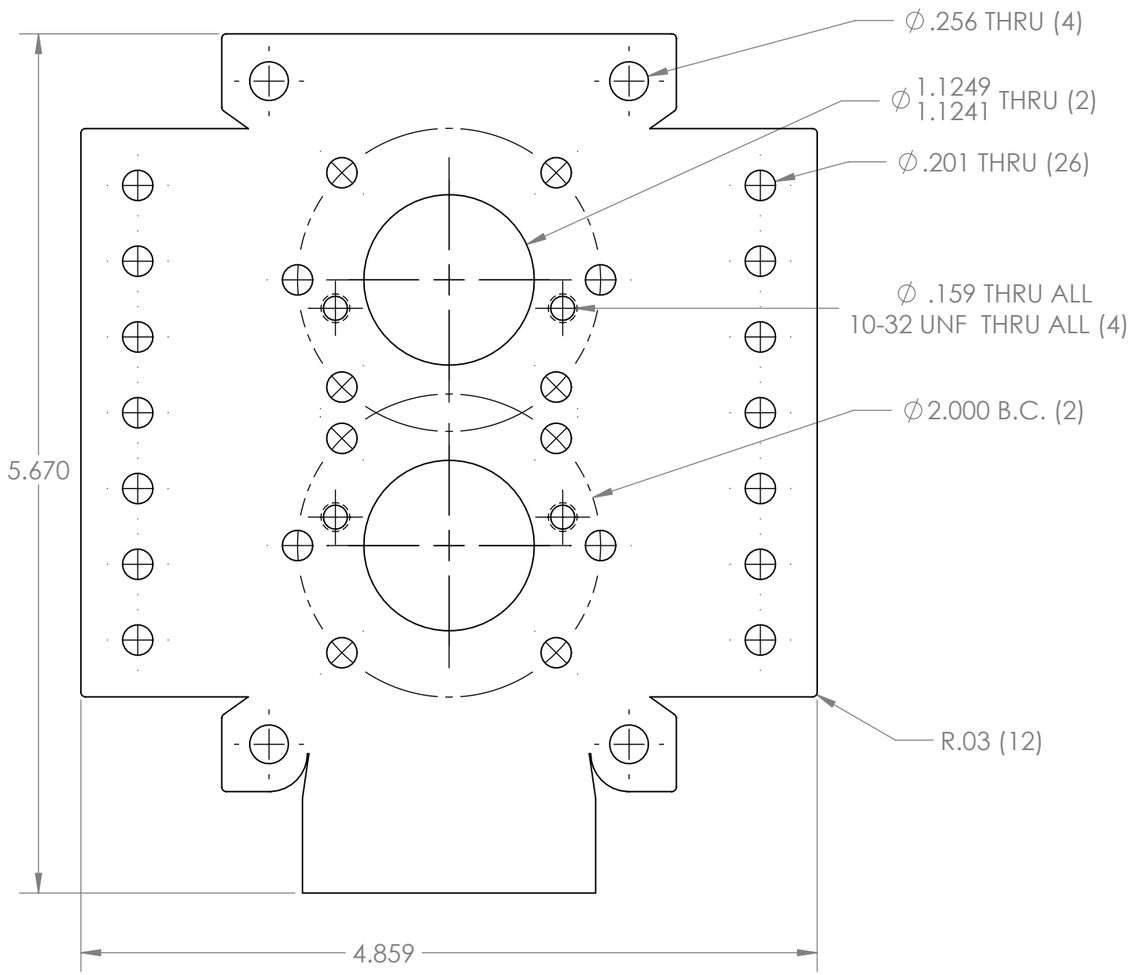

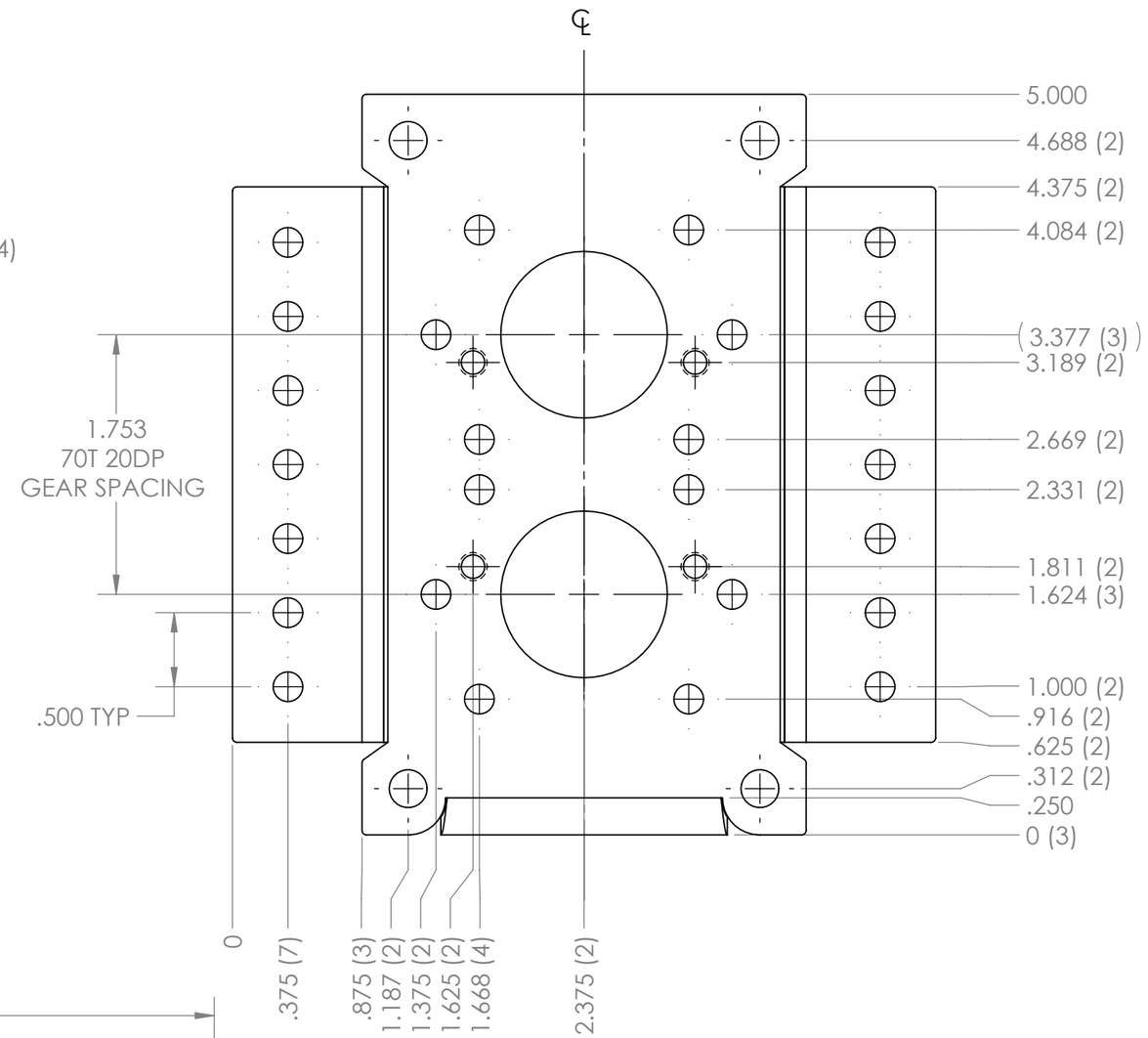

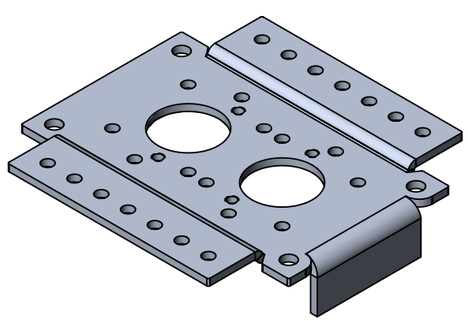

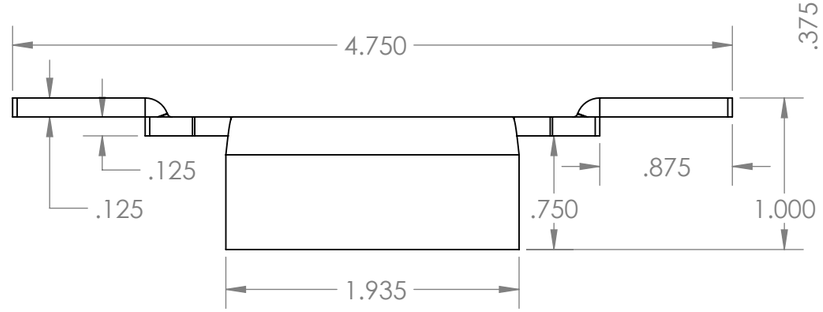

*** SEE CAD FOR ADDITIONAL TOOLPATH INFO***

UNLESS OTHERWISE SPECIFIED:		COMMENTS:
DIMENSIONS ARE IN INCHES		DUAL DIMENSIONS ARE IN MILLIMETERS.
TOLERANCES:		BREAK ALL SHARP EDGES.
FRACTIONAL	±1/16	
ANGULAR: MACH	±1°	
ANGULAR: BEND	±5°	
ONE PLACE DECIMAL	±0.1	
TWO PLACE DECIMAL	±0.01	
THREE PLACE DECIMAL	±0.005	
FOUR PLACE DECIMAL	±0.0005	
MATERIAL	5052 AL	
FINISH	TUMBLED	
DO NOT SCALE DRAWING		

	NAME	DATE
CHECKED		
ENG APPR.		
MFG APPR.		
Q.A.		

AndyMark

TITLE:

FLYER GEARBOX PLATE

SIZE	DWG. NO.	REV
B	am-4216	1

SCALE: 1:1 SHEET 1 OF 1